LONG SEAMS

COURSE	ORIENTATION	ORIENTATION
TOP	70°	195°
2	75°	200°
3	70°	195°
4	75°	200°

*VERT – TOP TO BOTTOM

*NOTE 8: (1) SPOT ON ANY ONE LS,
(1) SPOT ON ANY ONE CS,
(1) SPOT ON ANY ONE T-JOINT.

Ship loose items:
(1) Swing Gate (A71-24 (GALV.))
(1) Ladder w/ Hardware
(1) Platform w/ Hardware
(2 PC.) Handrail w/ Hardware

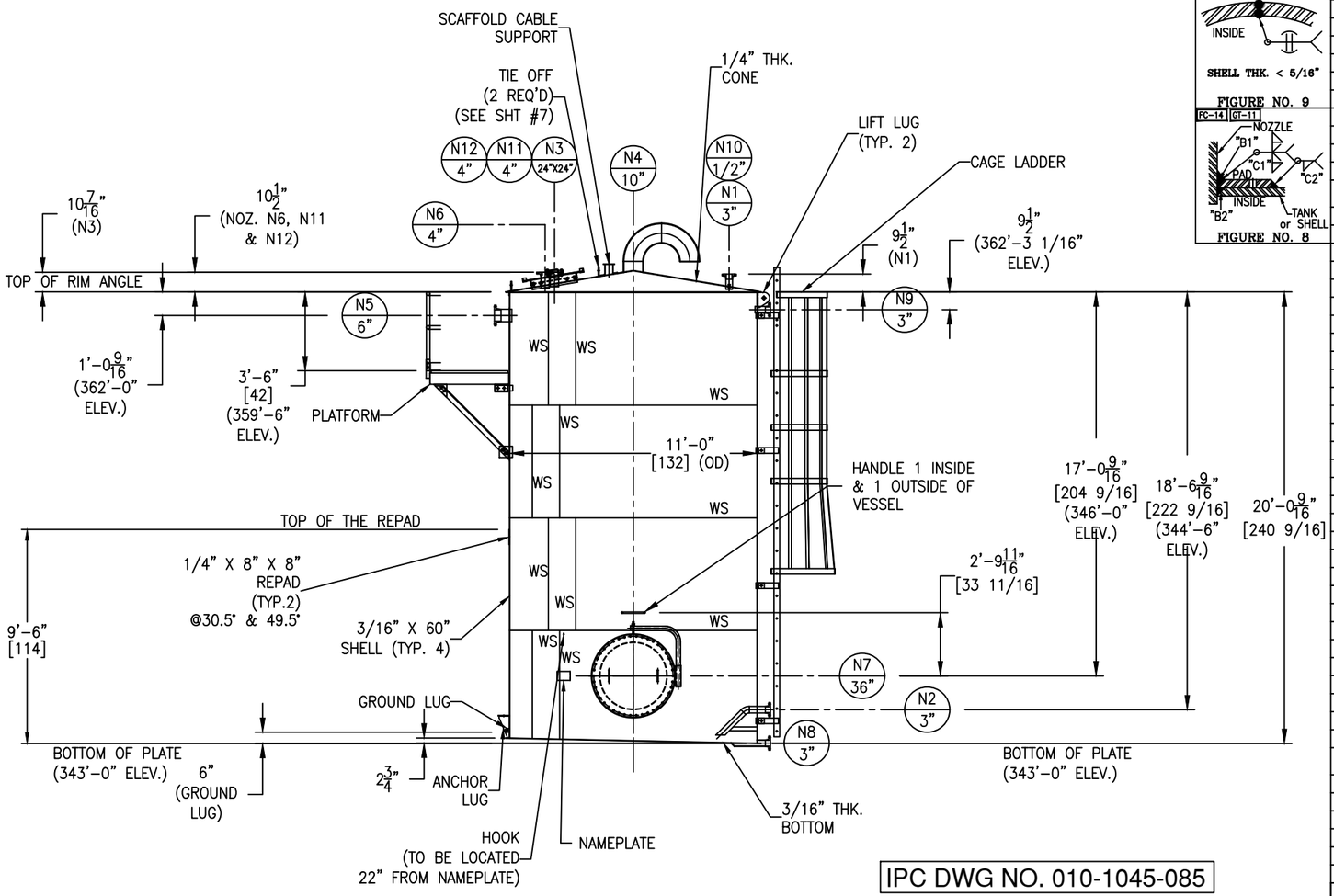

IPC DWG NO. 010-1045-085

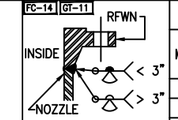

FIGURE NO. 2

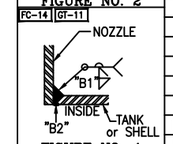

FIGURE NO. 4

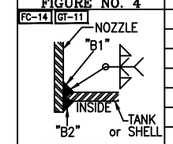

FIGURE NO. 7

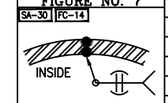

SHELL THK. < 5/16"

FIGURE NO. 9

FIGURE NO. 8

NOZZLE SCHEDULE

MARK	SERVICE	SIZE	RATING	TYPE / STYLE	NECK SCHED.	PROJECTION EXT. (℄)	PROJECTION INT. (MIN.)	WELD FIGURE	REPAD SIZE (WIDTH X THK.)	WELD SIZE "A1"	"A2"	"B1"	"B2"	"C1"	"C2"
N1	INLET	3"	150#	RFWN	40S	SEE DWG	1"	2,7	–	–	–	1/4	1/4	–	–
N2	DRY METERING SKID	3"	150#	RFWN	40S	SEE DWG	SEE DWG	2,7	–	–	–	1/4	1/4	–	–
N3	HATCH	24"X24"	–	API650	1/4"	SEE DWG	1"	7	–	–	–	3/16	3/16	–	–
N4	VENT	10"	–	PIPE	40S	SEE DWG	–	4	–	–	–	3/16	1/8	–	–
N5	OVERFLOW	6"	150#	RFWN	40S	8"	1"	2,7	–	–	–	1/4	1/4	–	–
N6	LEVEL TRANSMITTER	4"	150#	RFWN	40S	SEE DWG	1"	2,7	–	–	–	1/4	1/4	–	–
N7	MANWAY	36"	–	API W/DAVIT	1/4"	–	1"	8	4" X 3/16"	–	–	3/16	3/16	3/16	3/16
N8	DRAIN	3"	150#	RFWN	40S	SEE DWG	–	2,4	–	–	–	1/2	3/16	–	–
N9	LEVEL SWITCH	3"	150#	RFWN	40S	7"	1"	2,7	–	–	–	1/4	1/4	–	–
N10	METERING SKID CALIBRATION	1/2"	3000#	FULL THRD. CPLG.	–	–	1/2"	7	–	–	–	3/16	1/8	–	–
N11	SPARE	4"	150#	RFWN W/ BLIND	40S	SEE DWG	1"	2,7	–	–	–	1/4	1/4	–	–
N12	SMART TANK MONITORING	4"	150#	RFWN W/ BLIND	40S	SEE DWG	1"	2,7	–	–	–	1/4	1/4	–	–

MATERIALS OF CONSTRUCTION

	VESSEL
SHELL	SA240-316/316L
CONE/BOTTOM	SA240-316/316L
RIM ANGLE	SA479-316/316L
NOZZLE NECKS	SA312-316/316L WLD & SA403-316/316L WPW
NOZZLE FLANGES	SA182F-316/316L
MANWAY NECKS	SA240-316/316L
MANWAY COVER	SA240-316/316L
MANWAY GASKET	GARLOCK 3000
NOZZLE GASKET	GARLOCK 3000
HATCH NECK / COVER	SA240-316/316L
HATCH FLANGE	SA479-316/316L
BOLTS/STUDS	SA193-B7 (ZINC PLATED)
NUTS	SA194-2H (ZINC PLATED)
REPADS	SA240-304/304L
COUPLINGS	SA182F-316/316L
SUPPORTS/HOLD DOWNS	SA240-304/304L
LIFTING LUGS	SA240-304/304L
VACUUM RINGS	–
INSULATION RINGS	–
GROUND LUG	SA240-304/304L
BAFFLE	–
LADDER	SA36
TANK CLIPS (LADDER)	SA479-304/304L
HANDRAIL	SA500
HANDRAIL CLIPS	SA36
PLATFORM	SA36
PLATFORM CLIPS	SA479-304/304L
HOOK	SA479-304/304L
HANDLE	SA479-316/316L

DESIGN DATA

	VESSEL
DESIGN AND FAB. CODE	API650
CERT. STAMP REQ'D.	YES
DESIGN PRESSURE	ATM
DESIGN TEMPERATURE	150° F
MIN. DESIGN METAL TEMP.	-20° F @ ATM
OPERATING PRESSURE	ATM
OPERATING TEMPERATURE	MIN. 40° F / MAX. 100° F
JOINT EFFICIENCY HEADS	0.70
JOINT EFFICIENCY SHELL	0.70
CORROSION ALLOWANCE	0"
SPECIFIC GRAVITY	1.06
EARTHQUAKE ZONE	Ss = (0.157) S1 = (0.083)
WIND LOAD	120 MPH
STRESS RELIEF	NOT REQ'D
RADIOGRAPHIC EXAM	SPOT (PER CUSTOMER) SEE NOTE 8
DYE PENETRANT EXAM	SEE NOTE 7
MAGNETIC PARTICLE EXAM	NOT REQ'D
HYDROSTATIC TEST	–
PNEUMATIC TEST	2 PSIG / GAUGE #1
JKT HYDRO TEST	–
JKT DESIGN AND FAB. CODE	–
JKT CERT. STAMP REQ'D.	–
JKT DESIGN PRESSURE	–
JKT DESIGN TEMPERATURE	–
JKT MIN. DESIGN METAL TEMP.	–
JKT OPERATING PRESSURE	–
JKT OPERATING TEMPERATURE	–
JKT JOINT EFFICIENCY HEADS	–
JKT JOINT EFFICIENCY SHELL	–

VESSEL FINISH

INTERIOR WELD TREATMENT:	SAV TANK STANDARD
EXTERIOR WELD TREATMENT:	SAV TANK STANDARD
SAV TANK FINISHING STANDARD:	SEE NOTE 6
INSULATION:	N/A
GALVANIZING:	SEE NOTE 9

VESSEL CAPACITY AND WEIGHTS

OPERATING CAPACITY	–
FULL CAPACITY	14,370 GAL.
EMPTY VESSEL WEIGHT W/O ACCESSORIES	9,400 LBS.
WEIGHT FULL OF WATER	129,300 LBS.
WEIGHT FULL OF PRODUCT	136,500 LBS.
ACCESSORIES SHIPPING WEIGHT	1,360 LBS.

QUALITY CONTROL

ENG. _____ DATE: _____

Q.C. _____ DATE: _____

This drawing is issued for customer approval. please review, make approval changes (if any) in red. check the appropriate box, sign & date.

- ☐ Approval – no changes. Please proceed with fabrication.
- ☐ Approved as noted. Please proceed with fabrication
- ☐ Not approved. Please make changes and resubmit.

Customer signature _____ Date _____

GENERAL NOTES

1.) COVER ALL FLANGES, OPENINGS & MACHINED SURFACES PRIOR TO SHIPMENT UNLESS OTHERWISE NOTED.
2.) BOLT HOLES TO STRADDLE 0° & 180° UNLESS OTHERWISE NOTED.
3.) NOZZLE REPADS TO HAVE (1) ø1/4" TELL-TALE HOLES ON HORIZONTAL CENTER LINE. ALL OTHER REPADS TO HAVE (1) ø1/4" WEEP HOLE AT LOWEST POINT ON PAD.
4.) MANUFACTURING TOLERANCE TO BE IN ACCORDANCE WITH API STANDARD 650 7.5.
5.) ASME MATERIALS TO CONFORM TO THE FOLLOWING: FLANGES – B16.5, FITTINGS – B16.9 & COUPLINGS – B16.11.
6.) PICKLE ALL EXTERIOR WELDS. PASSIVATE INTERIOR & EXTERIOR OF VESSEL.
7.) DYE PEN – SHELL TO BOTTOM SEAM & ALL SHELL NOZZLES
8.) X-RAY: SPOT X-RAY ON ANY ONE LS, CS AND T-JOINT
9.) GALVANIZING: HANDRAILS, LADDER, PLATFORM AND GRATING TO BE HOT DIPPED GALVANIZED

REVISIONS

REV	D.BY	C.BY	DATE	DESCRIPTION
2	AD	–	5/22/25	AS BUILT CERTIFIED
1	RS	NP	4/10/25	APPROVAL REV 1
0	AD	RS	2/18/25	APPROVAL

Savannah Tank & Equipment Corp.
1517 Telfair Road, Savannah, GA 31415
(912) 233-8902

DRAWN BY: AD
CHK'D BY: RS
APPROVED BY: NP
SCALE: 1/4" = 1'-0"

IRVING
DRY STRENGTH BULK TANK
EQUIP. #010-1045-TAN-230-00
CUST. PO #20615990

DRAWING NO.: 037-25-1 SHT 1 OF 9 REV. SET 2

LONG SEAMS

COURSE	ORIENTATION	ORIENTATION
TOP	70°	195°
2	75°	200°
3	70°	195°
4	75°	200°

*VERT – TOP TO BOTTOM

Ship loose items:
(1) Swing Gate (A71-24 (GALV.))
(1) Ladder w/ Hardware
(1) Platform w/ Hardware
(2 PC.) Handrail w/ Hardware

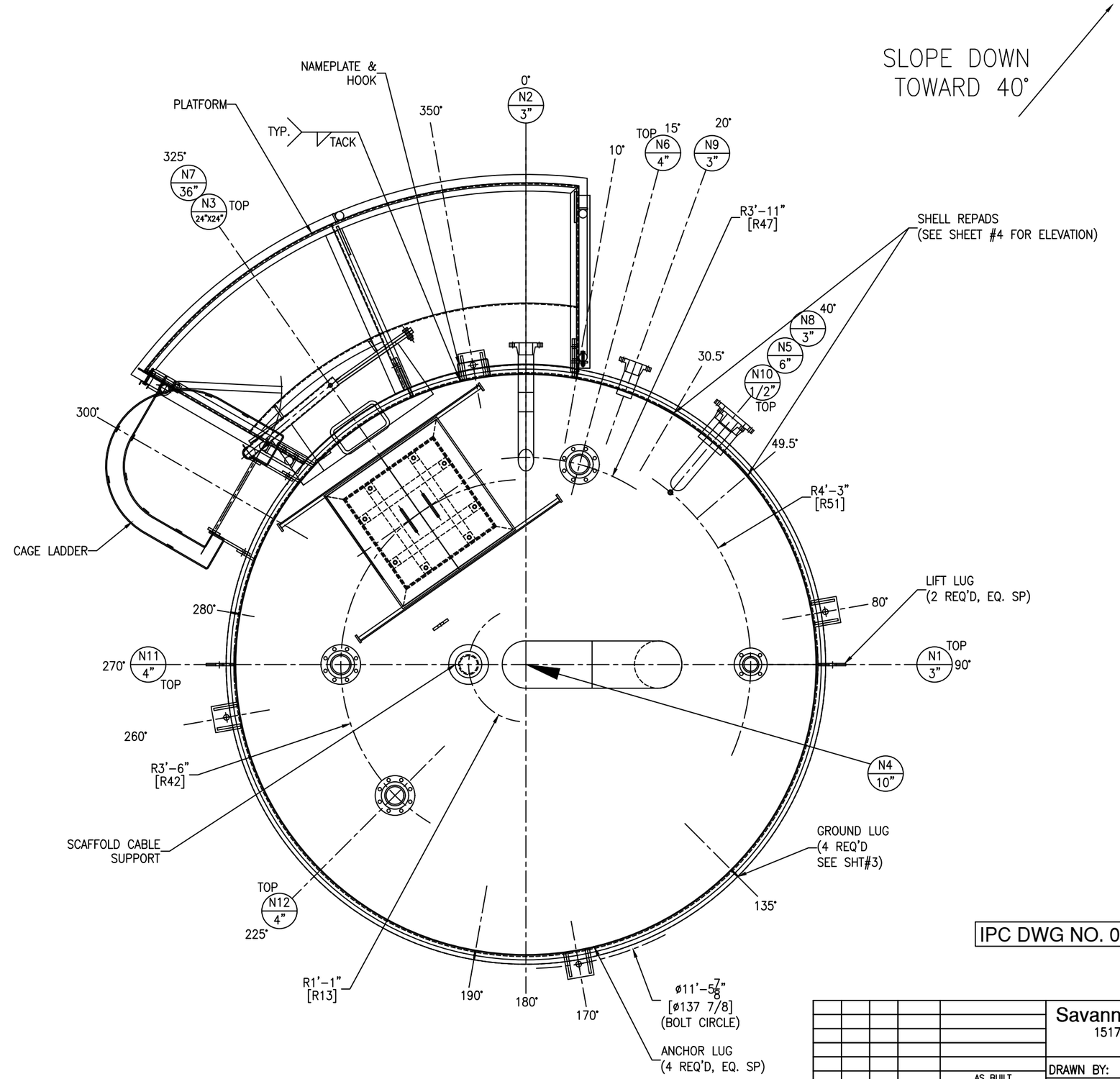

IPC DWG NO. 010-1045-028

REV	D.BY	C.BY	DATE	DESCRIPTION
				AS BUILT
2	AD	–	5/2/25	CERTIFIED
1	RS	NP	4/10/25	APPROVAL REV 1
0	AD	RS	2/18/25	APPROVAL

⚠ REVISIONS

Savannah Tank & Equipment Corp.
1517 Telfair Road, Savannah, GA 31415
(912) 233-8902

DRAWN BY: AD
CHK'D BY: RS
APPROVED BY: NP
SCALE: 3/4" = 1'-0"

IRVING
DRY STRENGTH BULK TANK
EQUIP. #010-1045-TAN-230-00
CUST. PO #20615990

DRAWING NO.: 037-25-2 SHT 2 OF 9 REV. SET 2

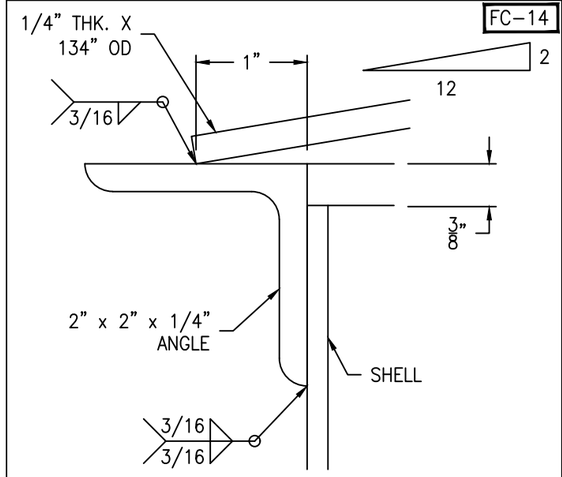

CONICAL ROOF DETAIL

SCALE: 1'-0" = 1'-0"

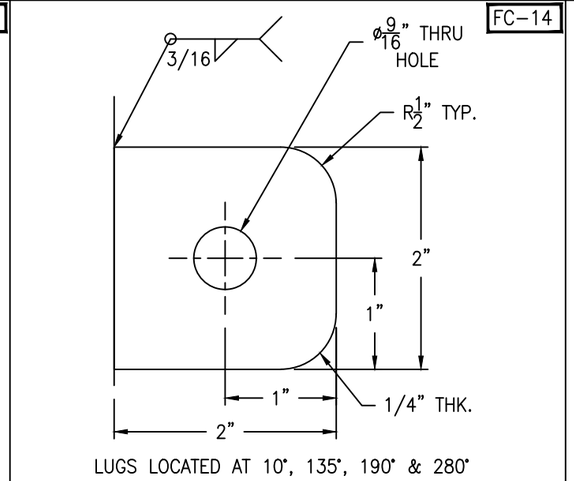

GROUND LUG DETAIL

(4 REQ'D) SCALE: 1'-0" = 1'-0"

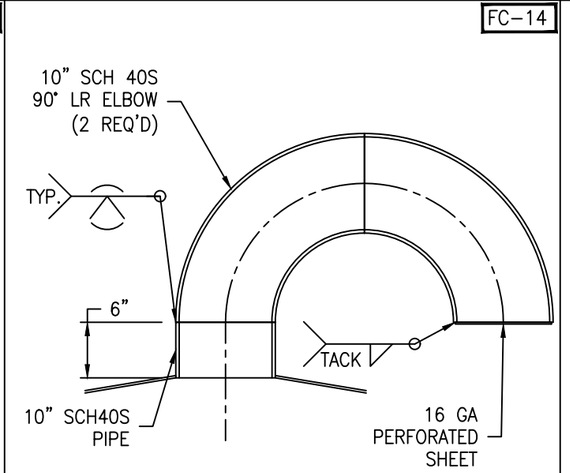

NOZZLE N4 DETAIL

SCALE: 1" = 1'-0"

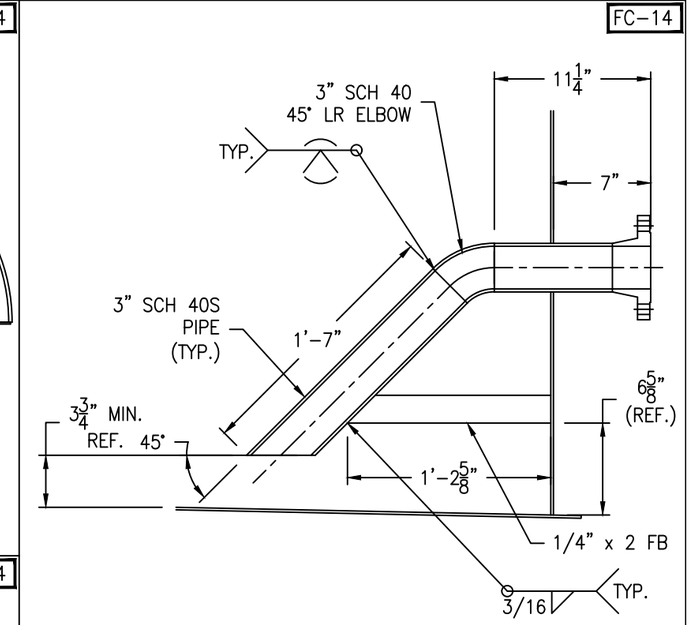

NOZZLE N2 DETAIL

SCALE: 1 1/2" = 1'-0"

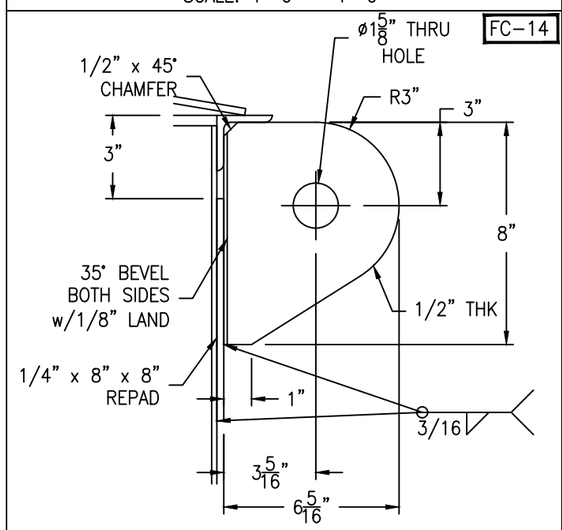

TANK WT. <= 20000#

SHACKLE PIN DIA. = 1 1/2"

ANGLE LIFT LUG

(2 REQ'D) SCALE: 3" = 1'-0"

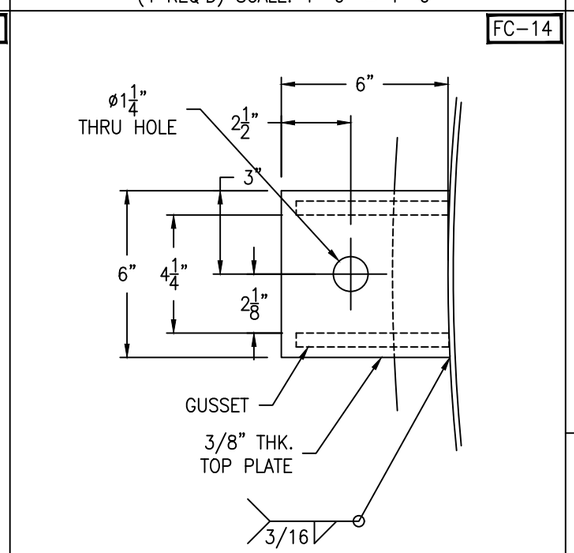

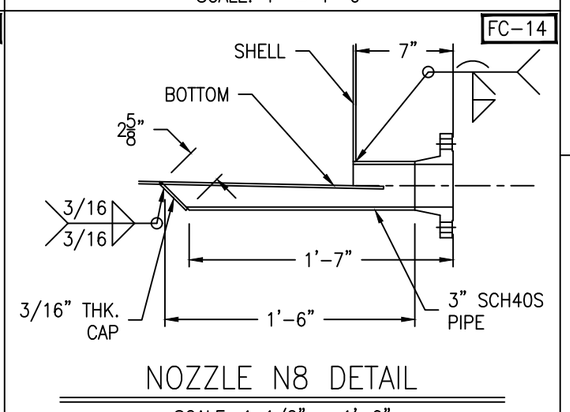

NOZZLE N8 DETAIL

SCALE: 1 1/2" = 1'-0"

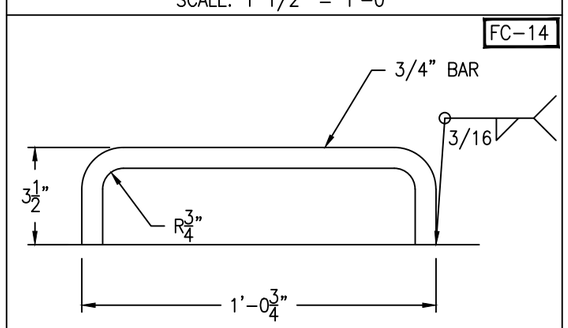

HANDLE DETAIL

(2 REQ'D) SCALE: 6" = 1'-0"

IPC DWG NO. 010-1045-029

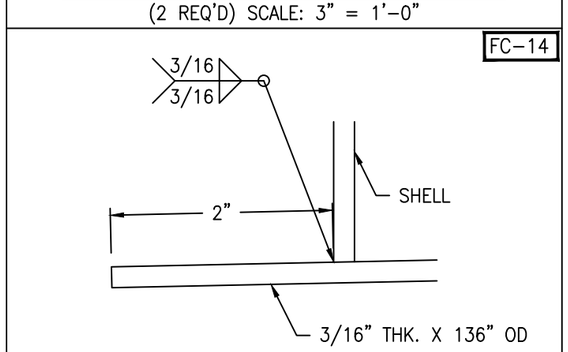

*NOTE: BOTTOM TO SLOPE 1/4" EVERY 1'-0"

BOTTOM DETAIL

SCALE: 1'-0" = 1'-0"

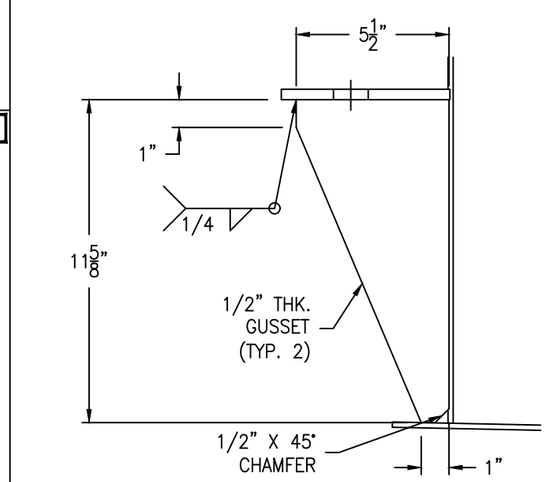

ANCHOR LUG DETAIL

(4 REQ'D) SCALE: 3" = 1'-0"

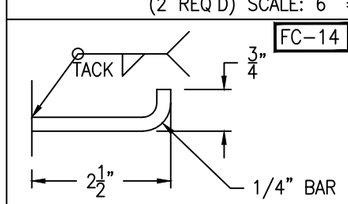

HOOK DETAIL

SCALE: 6" = 1'-0"

REV	D.BY	C.BY	DATE	DESCRIPTION
				AS BUILT
2	AD	–	5/22/25	CERTIFIED
1	RS	NP	4/10/25	APPROVAL REV 1
0	AD	RS	2/18/25	APPROVAL

1 REVISIONS

Savannah Tank & Equipment Corp.
1517 Telfair Road, Savannah, GA 31415
(912) 233-8902

DRAWN BY: AD

CHK'D BY: RS

APPROVED BY: NP

SCALE: 1/4" = 1'-0"

IRVING
DRY STRENGTH BULK TANK
EQUIP. #010-1045-TAN-230-00
CUST. PO #20615990

DRAWING NO.: 037-25-3 SHT 3 OF 9 REV. SET 2

LADDER CLIP BOLTING:
(8) 5/8-11 NC X 2" HH BOLT - SA193-B7 (ZINC PLATED)
(8) 5/8-11 NC HH NUT - SA194-2H (ZINC PLATED)

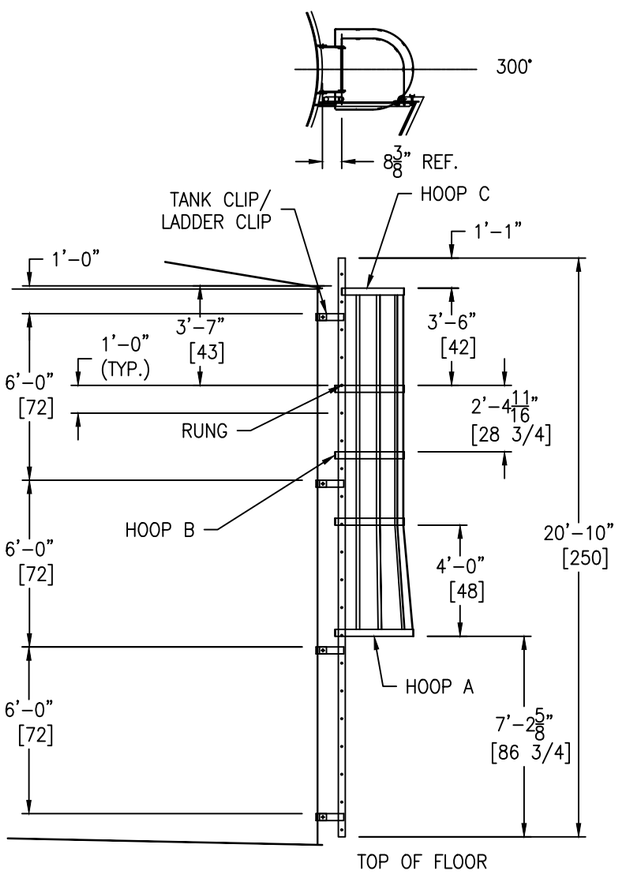

GM-73

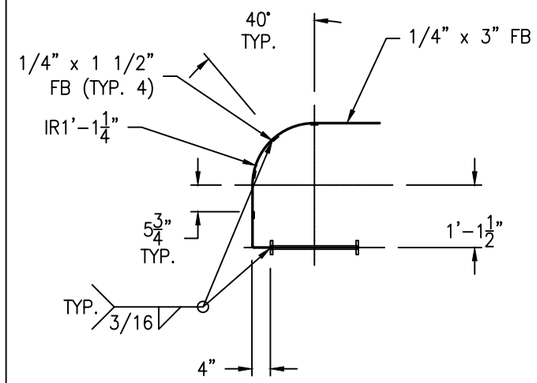

HOOP "C" DETAIL

(1 REQ'D) SCALE: 1 1/2" = 1'-0"

GM-73

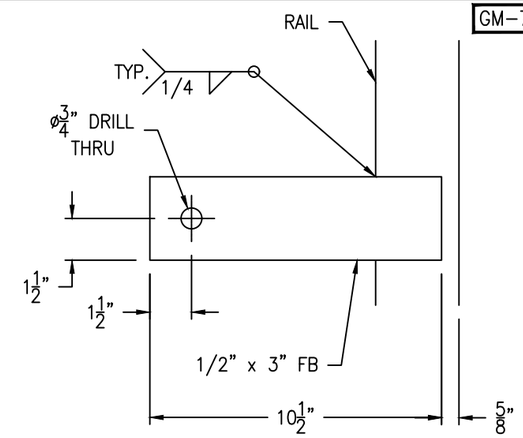

LADDER CLIP DETAIL

(8 REQ'D) SCALE: 3" = 1'-0"

FC-14

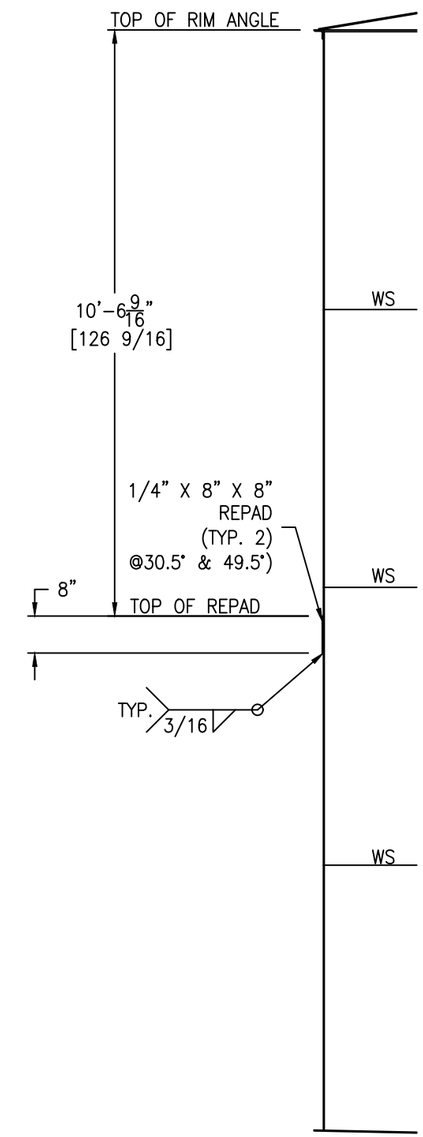

SHELL REPAD DETAIL

SCALE: 1/2" = 1'-0"

GM-73

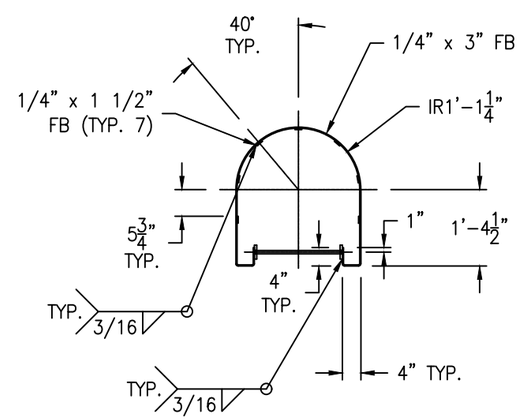

HOOP "B" DETAIL

(3 REQ'D) SCALE: 1 1/2" = 1'-0"

FC-14

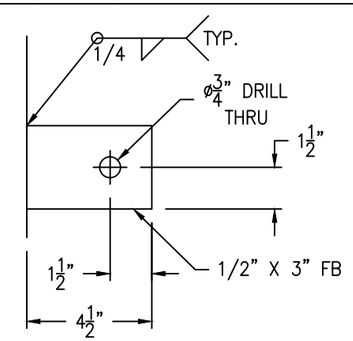

TANK CLIP DETAIL

(8 REQ'D) SCALE: 3" = 1'-0"

GM-73

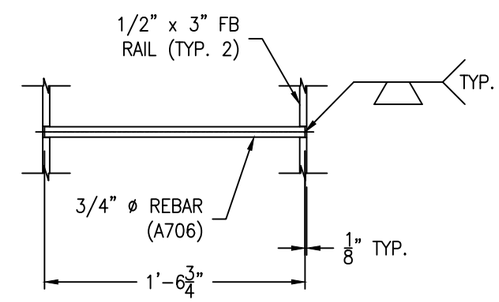

RUNG DETAIL

(21 REQ'D) SCALE: 1 1/2" = 1'-0"

GM-73

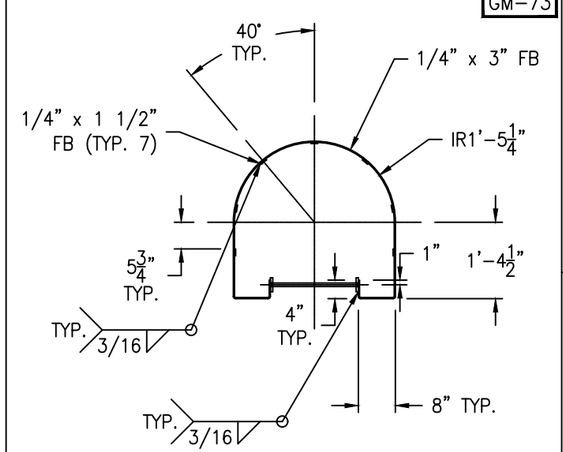

HOOP "A" DETAIL

(1 REQ'D) SCALE: 1 1/2" = 1'-0"

IPC DWG NO. 010-1045-030

LADDER TO BE HOT-DIPPED GALVANIZED

REV	D.BY	C.BY	DATE	DESCRIPTION
				AS BUILT
2	AD	-	5/22/25	CERTIFIED
1	RS	NP	4/10/25	APPROVAL REV 1
0	AD	RS	2/18/25	APPROVAL

⚠1 REVISIONS

Savannah Tank & Equipment Corp.
1517 Telfair Road, Savannah, GA 31415
(912) 233-8902

DRAWN BY: AD
CHK'D BY: RS
APPROVED BY: NP
SCALE: 1/4" = 1'-0"

IRVING
DRY STRENGTH BULK TANK
EQUIP. #010-1045-TAN-230-00
CUST. PO #20615990

DRAWING NO.: 037-25-4 SHT 4 OF 9 REV. SET 2

FC-38

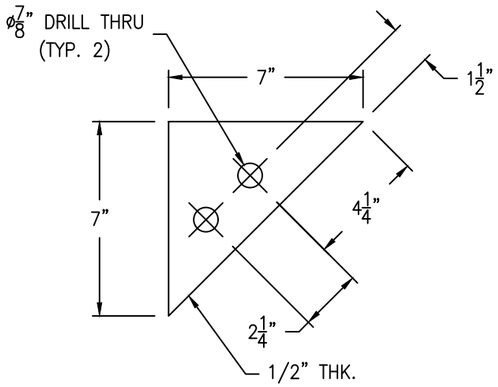

PLATFORM BRACE CLIP DETAIL

(3 REQ'D) SCALE: 3" = 1'-0"

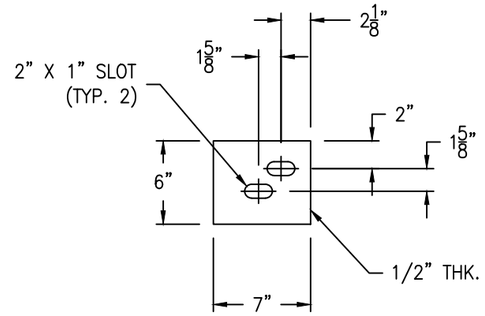

TANK BRACE CLIP DETAIL

(3 REQ'D) SCALE: 1 1/2" = 1'-0"

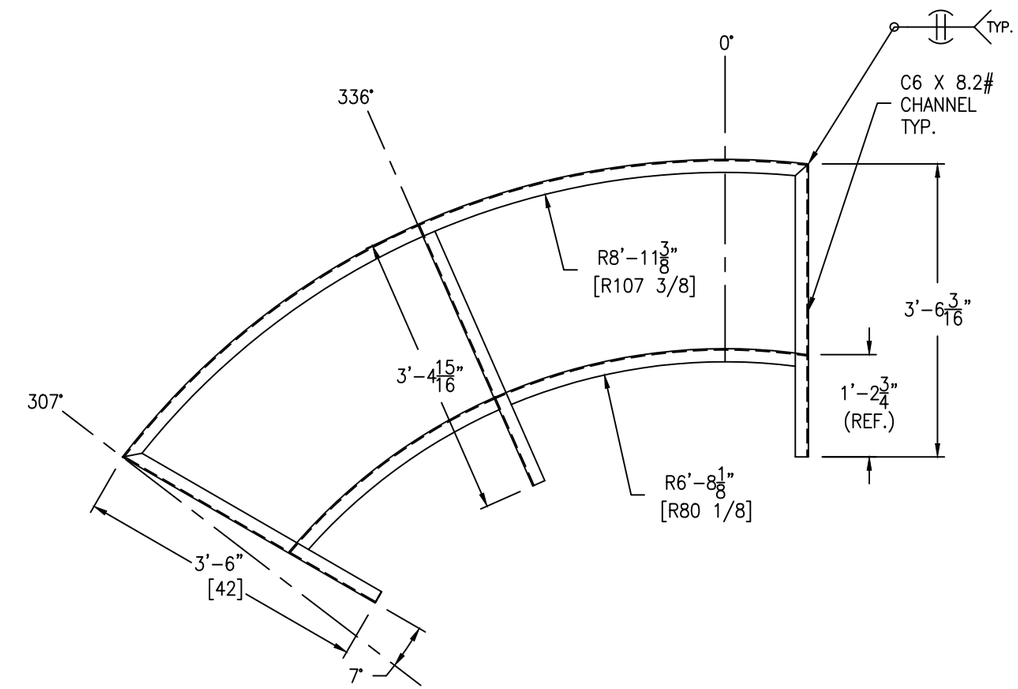

PLATFORM FRAME DETAIL

SCALE: 3/4" = 1'-0"

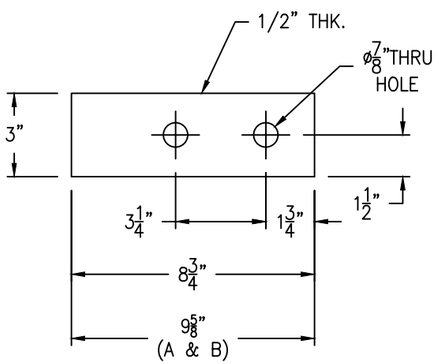

TANK CLIP C DETAIL

(1 REQ'D) SCALE: 3" = 1'-0"

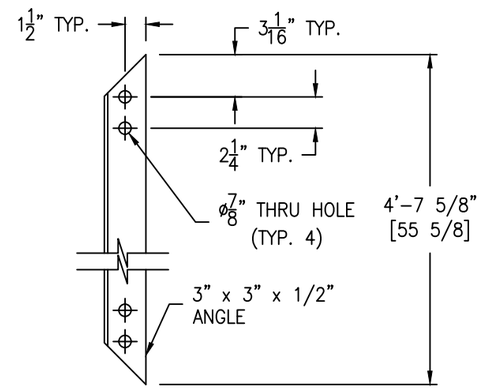

BRACE DETAIL

(3 REQ'D) SCALE: 1 1/2" = 1'-0"

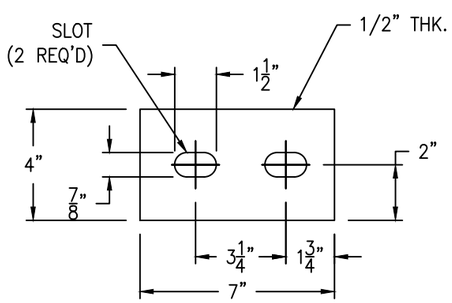

PLATFORM CLIP DETAIL

(3 REQ'D) SCALE: 3" = 1'-0"

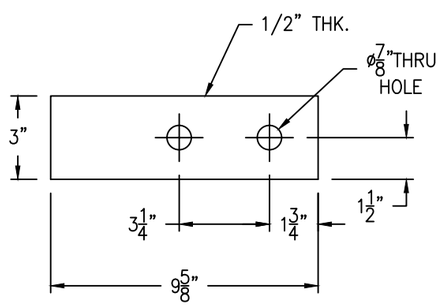

TANK CLIP A & B DETAIL

(2 REQ'D) SCALE: 3" = 1'-0"

IPC DWG NO. 010-1045-032

PLATFORM TO BE HOT-DIPPED GALVANIZED

REV	D.BY	C.BY	DATE	DESCRIPTION
				AS BUILT
2	AD	–	5/22/25	CERTIFIED
1	RS	NP	4/10/25	APPROVAL REV 1
0	AD	RS	2/18/25	APPROVAL

⚠ REVISIONS

Savannah Tank & Equipment Corp.
1517 Telfair Road, Savannah, GA 31415
(912) 233-8902

DRAWN BY: AD
CHK'D BY: RS
APPROVED BY: NP
SCALE: 3/8" = 1'-0"

IRVING
DRY STRENGTH BULK TANK
EQUIP. #010-1045-TAN-230-00
CUST. PO #20615990

DRAWING NO.: 037-25-5 SHT 5 OF 9 REV. SET 2

FC-38
FC-14

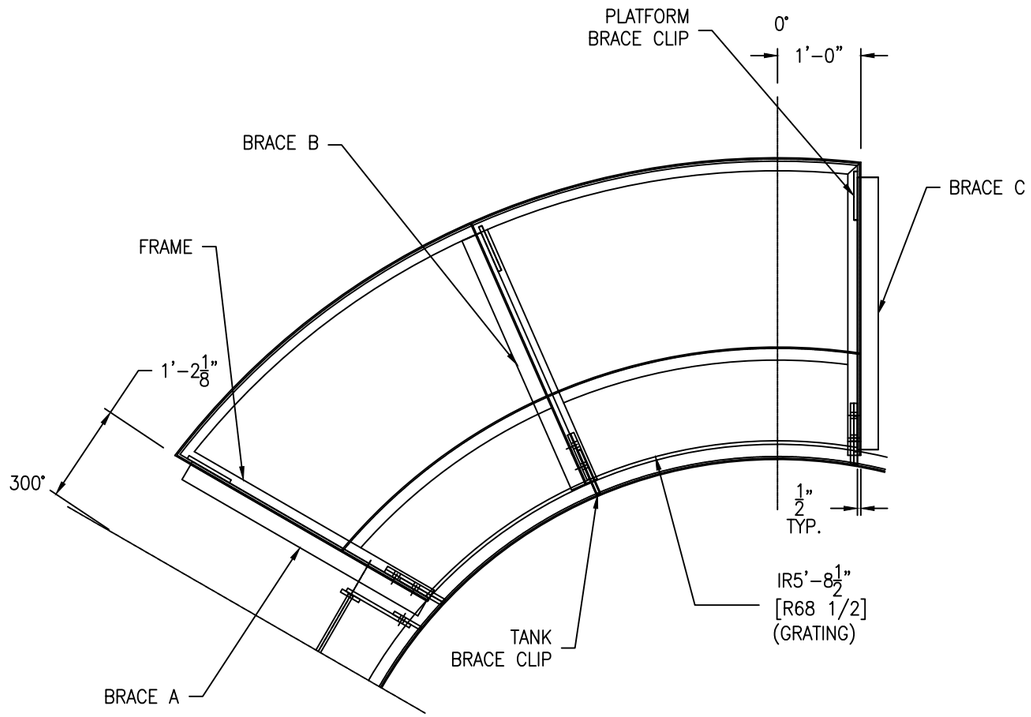

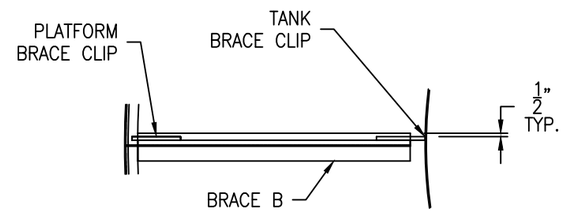

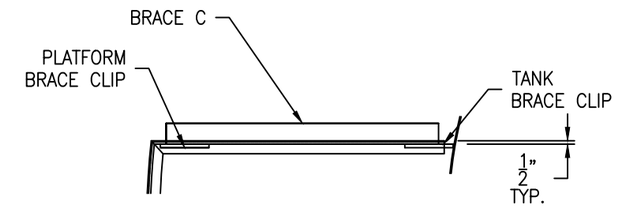

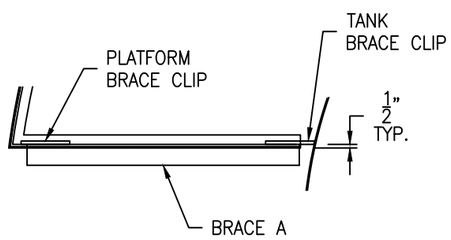

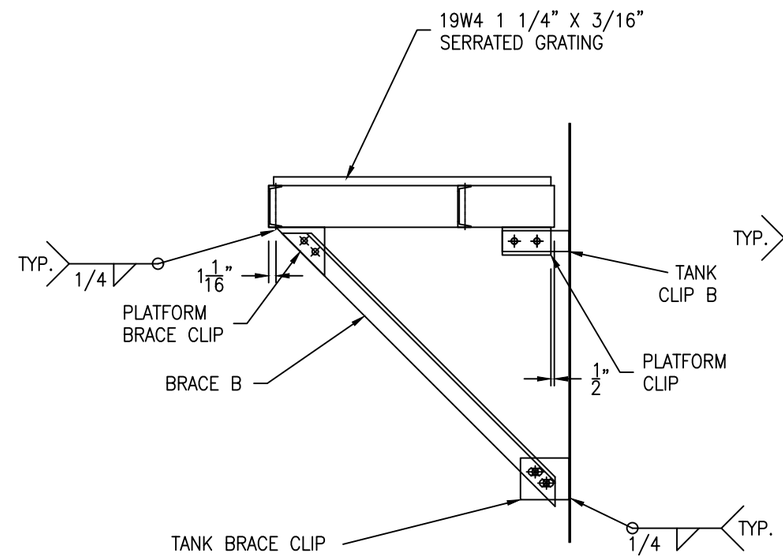

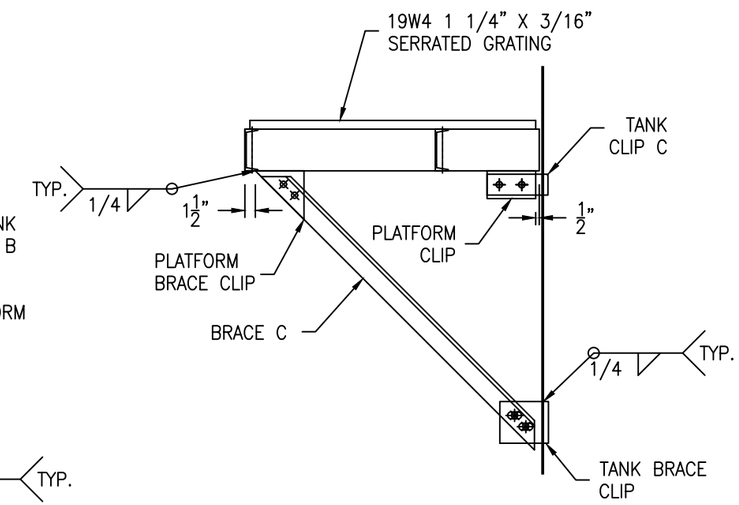

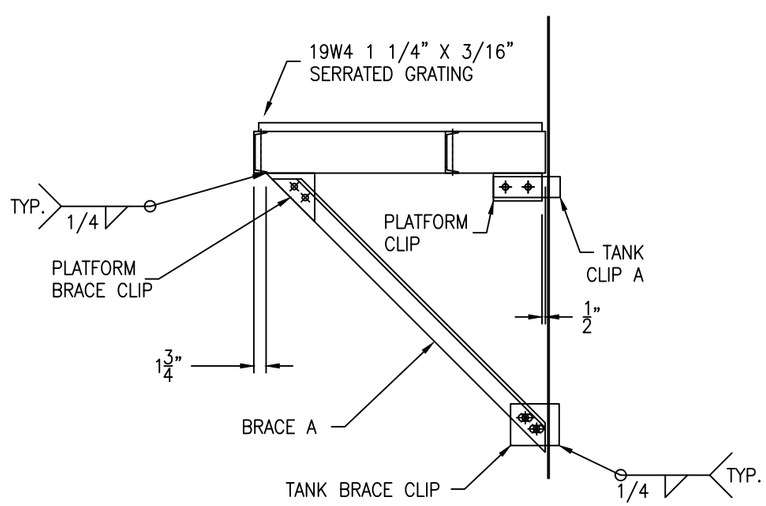

SCALE: 3/4" = 1'-0"

FRAME SUPPORT BOLTING:
(18) 3/4-10 NC X 2 1/2" HH BOLT - SA193-B7 (ZINC PLATED)
(18) 3/4-10 NC HH NUT - SA194-2H (ZINC PLATED)

IPC DWG NO. 010-1045-205

GRATING TO BE HOT-DIPPED GALVANIZED

REV	D.BY	C.BY	DATE	DESCRIPTION
				AS BUILT
2	AD	-	5/22/25	CERTIFIED
1	RS	NP	4/10/25	APPROVAL REV 1
0	AD	RS	2/18/25	APPROVAL

⚠1 REVISIONS

Savannah Tank & Equipment Corp.
1517 Telfair Road, Savannah, GA 31415
(912) 233-8902

DRAWN BY: AD
CHK'D BY: RS
APPROVED BY: NP
SCALE: 3/8" = 1'-0"

IRVING
DRY STRENGTH BULK TANK
EQUIP. #010-1045-TAN-230-00
CUST. PO #20615990

DRAWING NO.: 037-25-6 SHT 6 OF 9 REV. SET 2

HANDRAIL BOLTING:
(12) 1/2-13 NC X 3" HH BOLT - SA193-B7 (ZINC PLATED)
(12) 1/2-13 NC HH NUT - SA194-2H (ZINC PLATED)

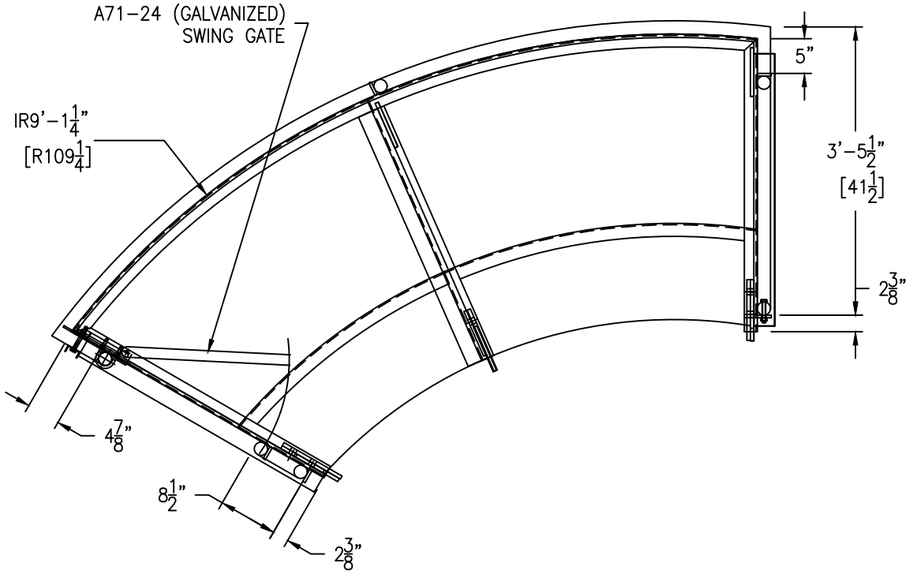

HANDRAIL DETAIL

SCALE: 3/4" = 1'-0"

FC-14

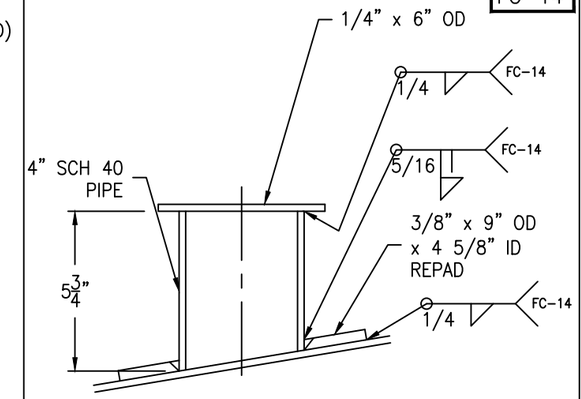

SCAFFOLD CABLE SUPPORT DETAIL

SCALE: 3" = 1'-0"

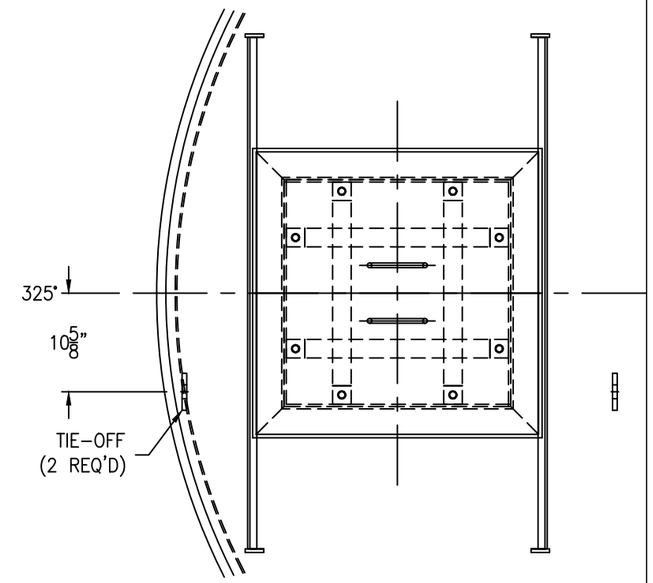

FC-14

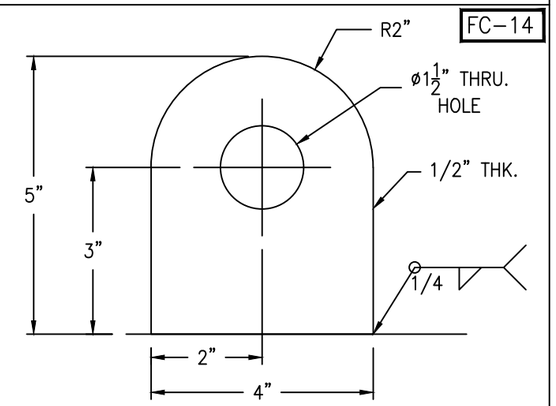

SHACKLE PIN DIA. = 3/4"

TIE-OFF LUG DETAIL

(2 REQ'D) SCALE: 6" = 1'-0"

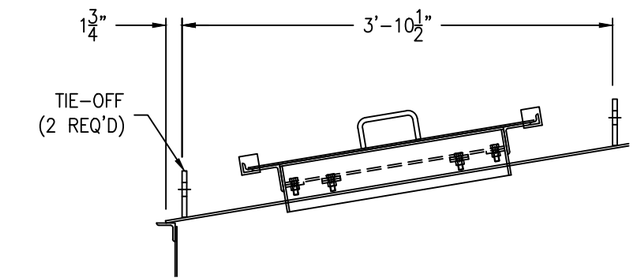

TIE-OFF LUG LOCATION DETAIL

SCALE: 1" = 1'-0"

GM-73

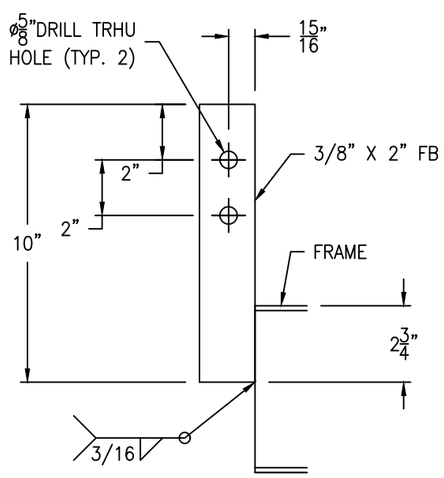

POST CLIP DETAIL

(6 REQ'D) SCALE: 3" = 1'-0"

GM-73

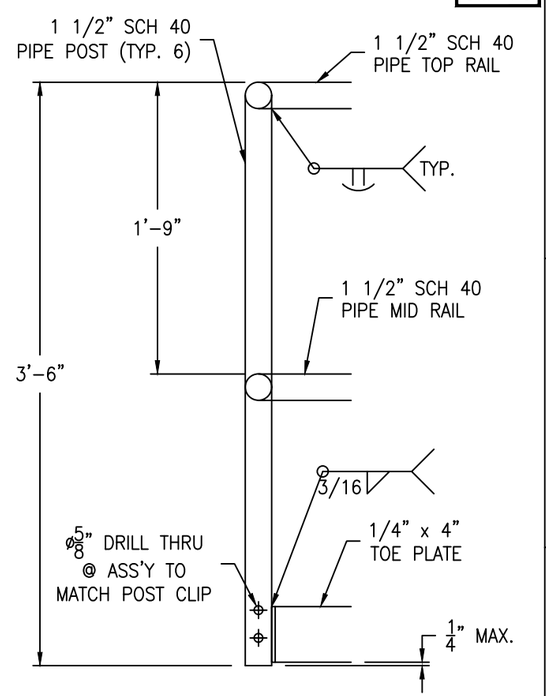

*NOTE: DRILL HOLES IN RAILS AND POSTS IF GALVANIZED.

HANDRAIL DETAIL

SCALE: 1 1/2" = 1'-0"

BOLTING FOR NOZZLE N11:
(8) 5/8-11 NC X 3" HH BOLT - SA193-B7 (ZINC PLATED)
(8) 5/8-11 NC HH NUT - SA194-2H (ZINC PLATED)
(1) RING GASKET, 4" 150# X 1/8" THK.

BOLTING FOR NOZZLE N12:
(8) 5/8-11 NC X 3" HH BOLT - SA193-B7 (ZINC PLATED)
(8) 5/8-11 NC HH NUT - SA194-2H (ZINC PLATED)
(1) RING GASKET, 4" 150# X 1/8" THK.

IPC DWG NO. 010-1045-206

HANDRAIL TO BE HOT-DIPPED GALVANIZED

REV	D.BY	C.BY	DATE	DESCRIPTION
				AS BUILT
2	AD	-	5/22/25	CERTIFIED
1	RS	NP	4/10/25	APPROVAL REV 1
0	AD	RS	2/18/25	APPROVAL

⚠ REVISIONS

Savannah Tank & Equipment Corp.
1517 Telfair Road, Savannah, GA 31415
(912) 233-8902

DRAWN BY: AD
CHK'D BY: RS
APPROVED BY: NP
SCALE: 3/8" = 1'-0"

IRVING
DRY STRENGTH BULK TANK
EQUIP. #010-1045-TAN-230-00
CUST. PO #20615990

DRAWING NO.: 037-25-7 SHT 7 OF 9 REV. SET 2

FC-14

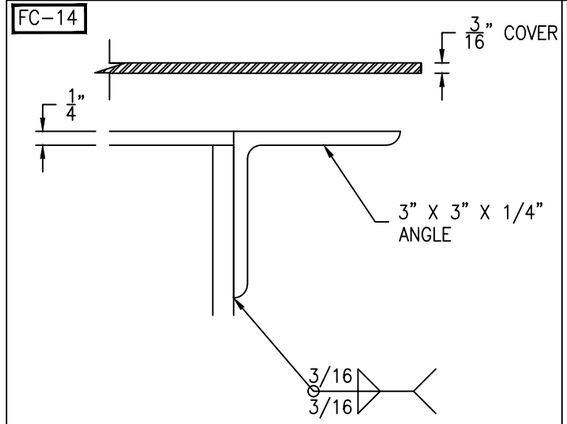

FLANGE/COVER DETAIL

(1 REQ'D) SCALE: 6" = 1'-0"

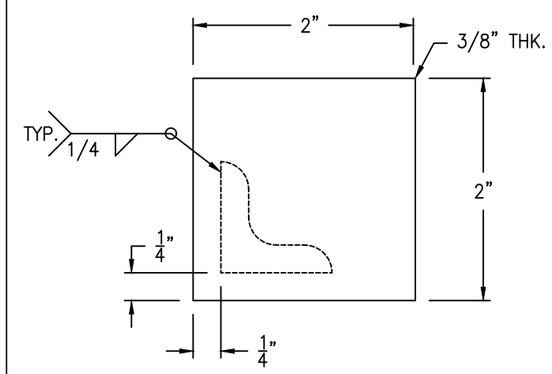

STOP DETAIL

(4 REQ'D) SCALE: 12" = 1'-0"

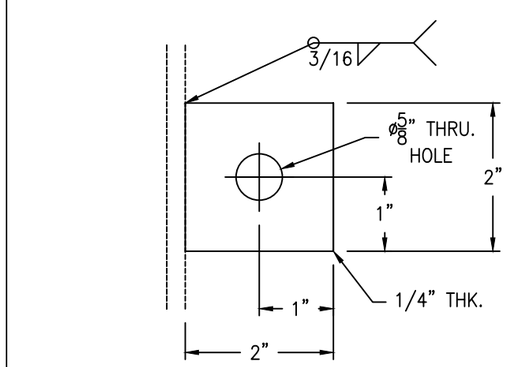

CLIP DETAIL

(8 REQ'D) SCALE: 2" = 1'-0"

FC-14

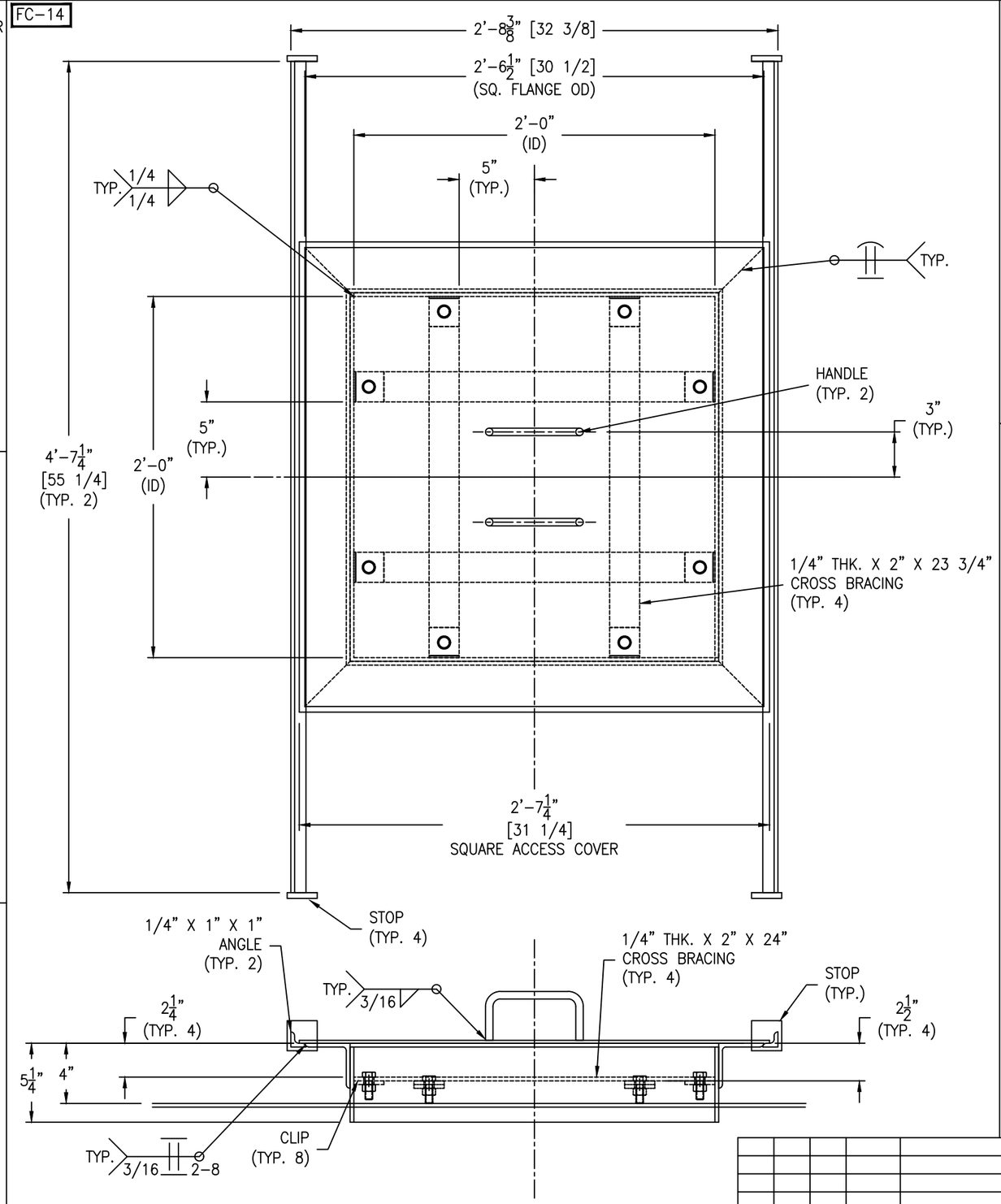

Bolting for cross brace
(8) 1/2-13 NC x 1 1/2" HH BOLT
(8) 1/2-13 NC HH NUT

IPC DWG NO. 010-1045-033

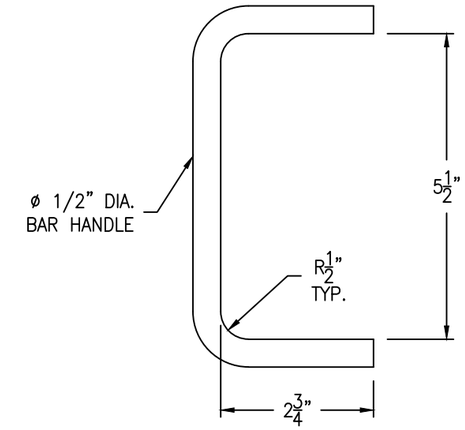

HANDLE DETAIL

(2 REQ'D) SCALE: 6" = 1'-0"

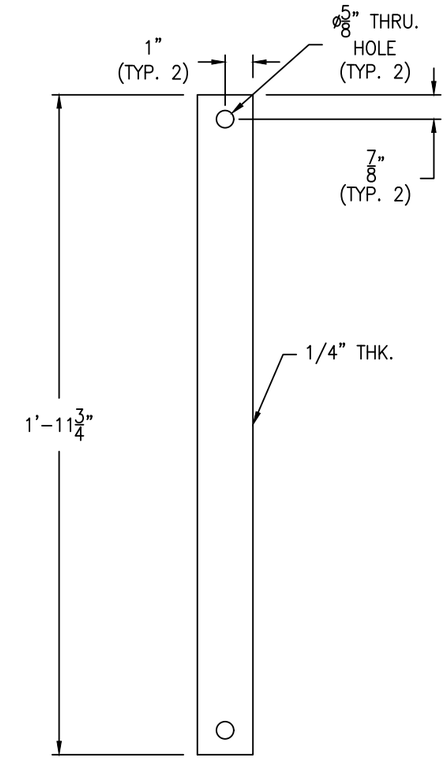

CROSS BRACE DETAIL

(4 REQ'D) SCALE: 3" = 1'-0"

REV	D.BY	C.BY	DATE	DESCRIPTION
				AS BUILT
2	AD	–	5/22/25	CERTIFIED
1	RS	NP	4/10/25	APPROVAL REV 1
0	AD	RS	2/18/25	APPROVAL

⚠1 REVISIONS

Savannah Tank & Equipment Corp.
1517 Telfair Road, Savannah, GA 31415
(912) 233-8902

DRAWN BY: AD
CHK'D BY: RS
APPROVED BY: NP
SCALE: 2" = 1'-0"

IRVING
DRY STRENGTH BULK TANK
EQUIP. #010-1045-TAN-230-00
CUST. PO #20615990

DRAWING NO.: 037-25-8 SHT 8 OF 9 REV. SET 2

FC-14

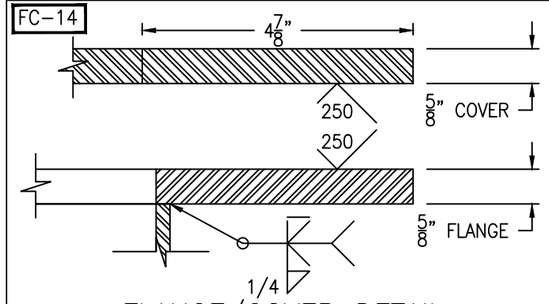

FLANGE/COVER DETAIL

(1 REQ'D) SCALE: 6" = 1'-0"

FC-14

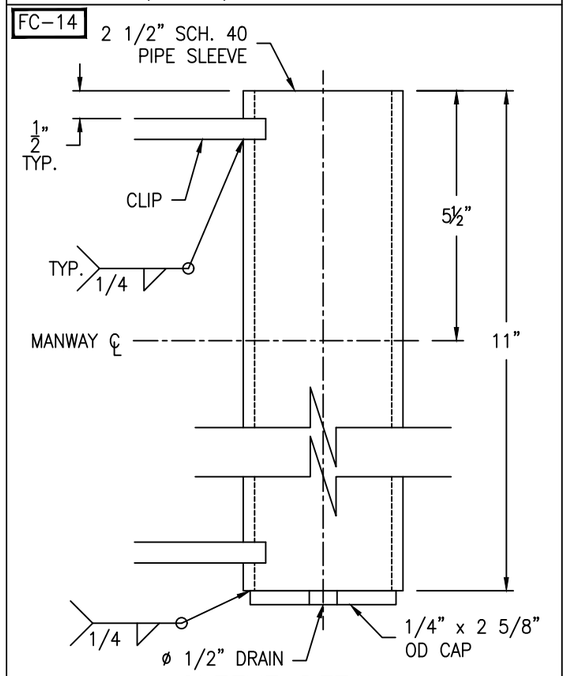

SLEEVE DETAIL

(1 REQ'D) SCALE: 6" = 1'-0"

FC-14

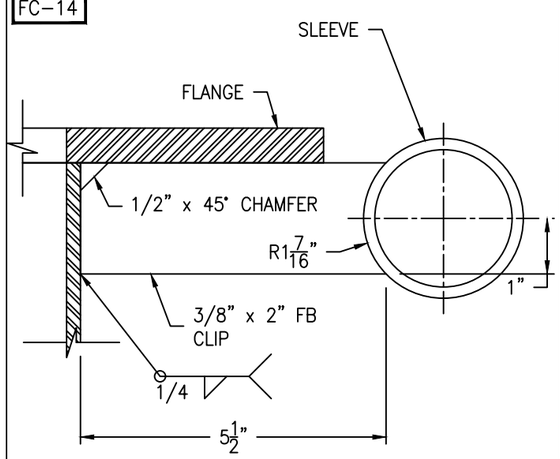

CLIP DETAIL

(2 REQ'D) SCALE: 6" = 1'-0"

FC-14

Bolting for blind
(42) 3/4-10 NC x 2 1/2" HH BOLT
(42) 3/4-10 NC HH NUT
(1) 41 3/8" OD x 36" ID x 1/8" GASKET

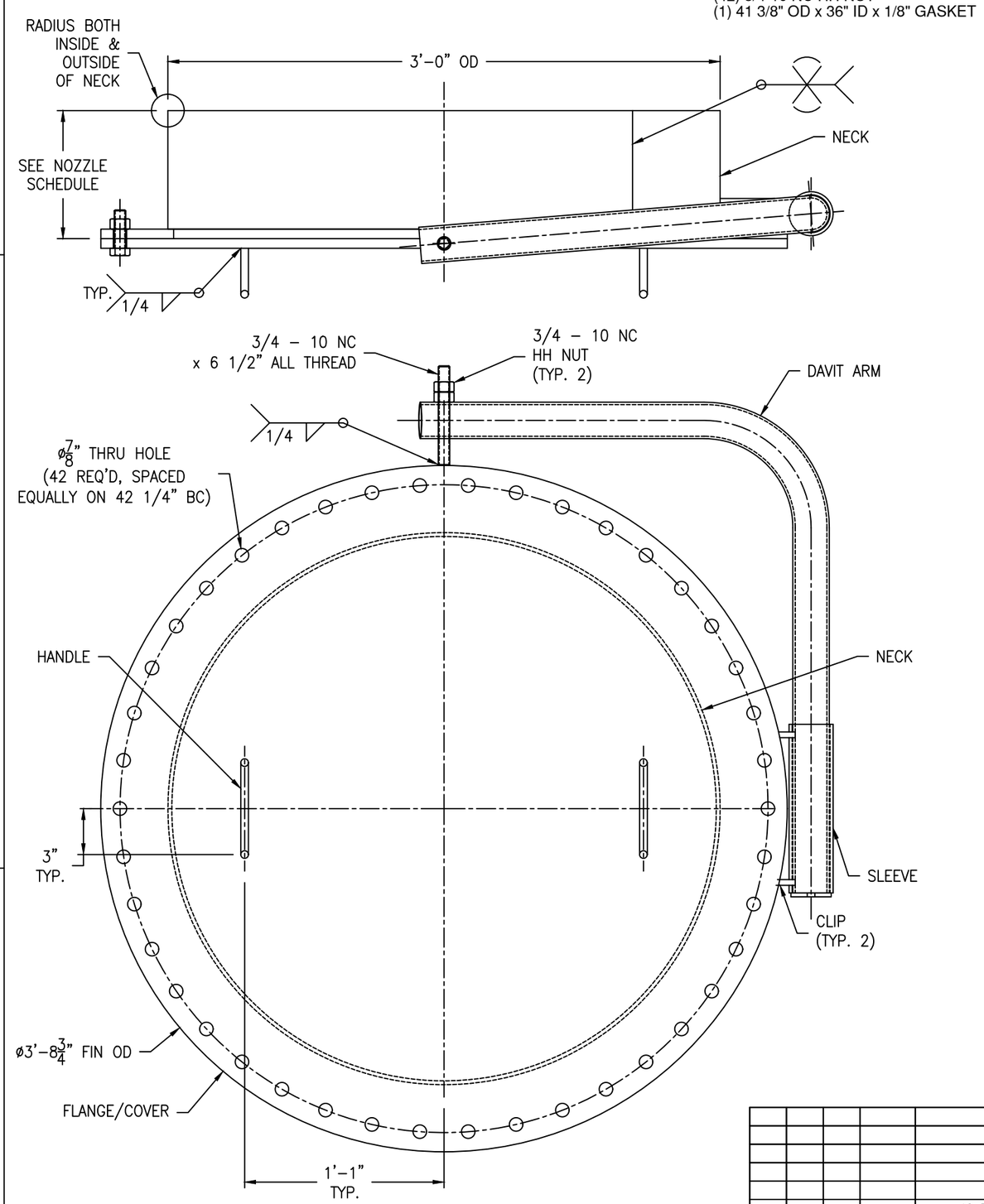

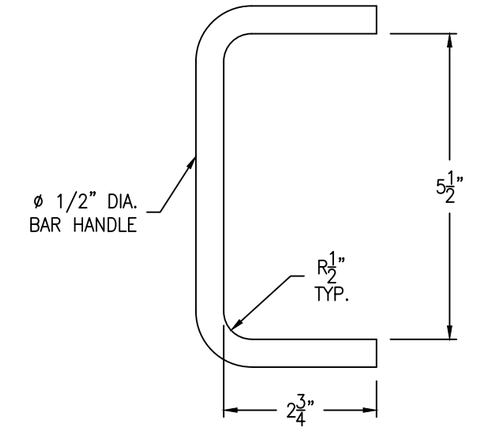

HANDLE DETAIL

(2 REQ'D) SCALE: 6" = 1'-0"

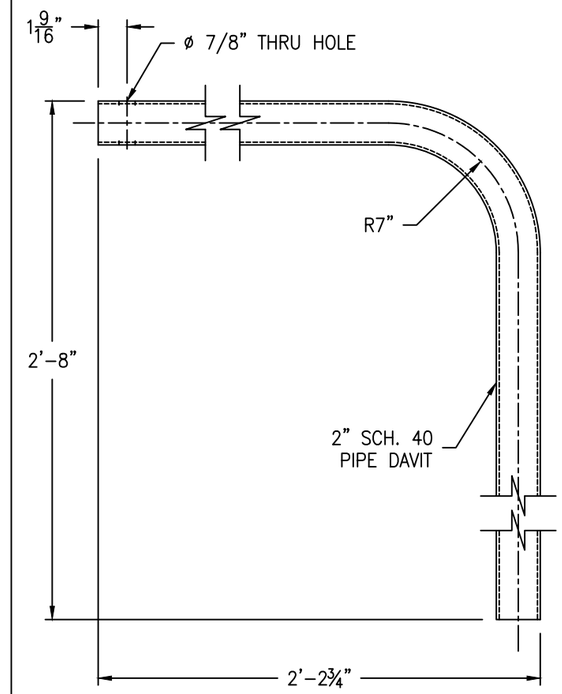

DAVIT ARM DETAIL

(1 REQ'D) SCALE: 2" = 1'-0"

IPC DWG NO. 010-1045-031

REV	D.BY	C.BY	DATE	DESCRIPTION
				AS BUILT
2	AD	–	5/22/25	CERTIFIED
1	RS	NP	4/10/25	APPROVAL REV 1
0	AD	RS	2/18/25	APPROVAL

⚠1 REVISIONS

Savannah Tank & Equipment Corp.
1517 Telfair Road, Savannah, GA 31415
(912) 233-8902

DRAWN BY: AD
CHK'D BY: RS
APPROVED BY: NP
SCALE: 2" = 1'-0"

IRVING
DRY STRENGTH BULK TANK
EQUIP. #010-1045-TAN-230-00
CUST. PO #20615990

DRAWING NO.: 037-25-9 SHT 9 OF 9 REV. SET 2